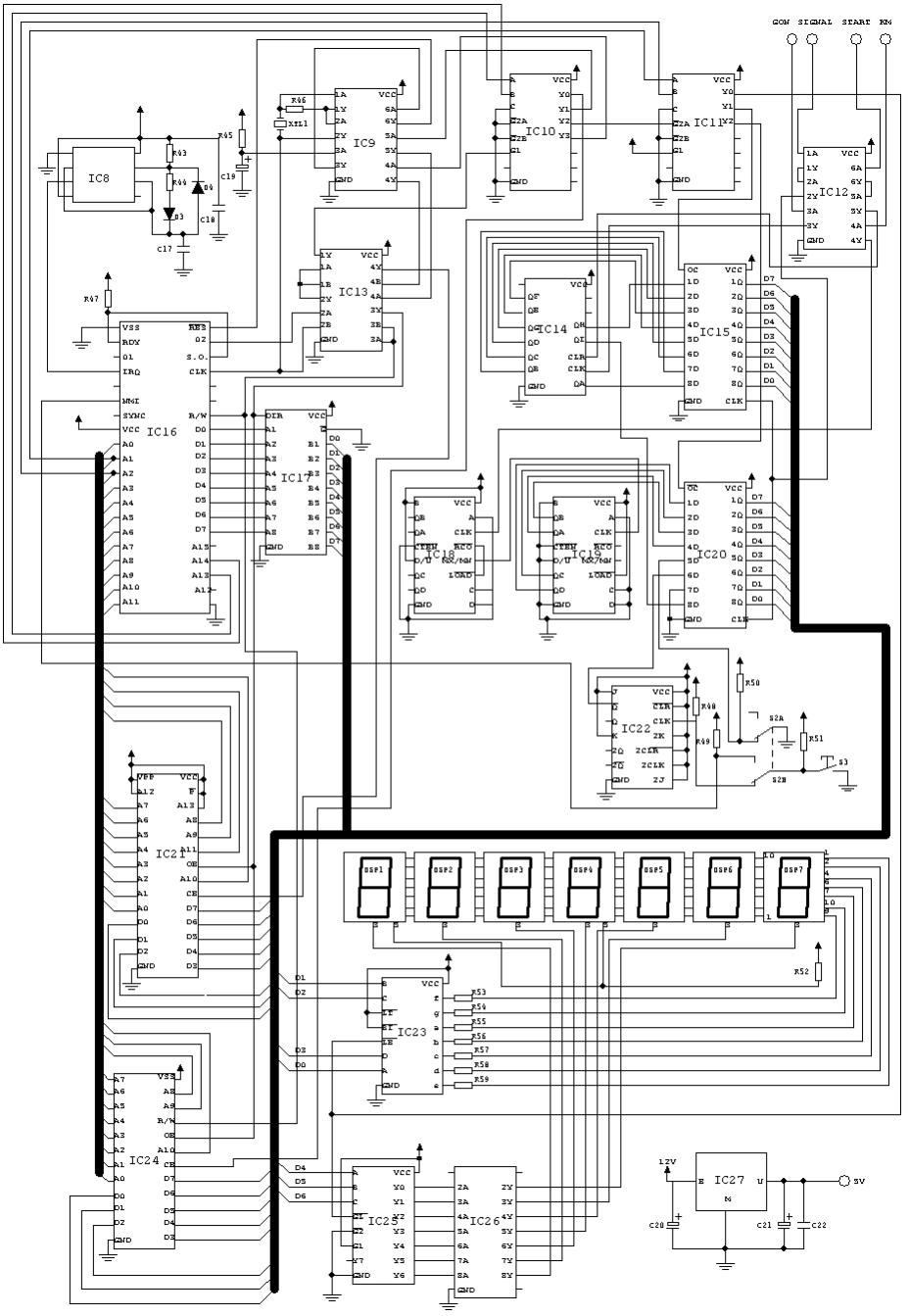
COM SIGNAL START KN
IC8
IC9
IC10
IC11
IC12
IC13
IC14
IC15
IC16
IC17
IC18
IC19
IC20
IC21
IC22
IC23
IC24
IC25
IC26
IC27
R43
R44
R45
R46
R47
R48
R49
R50
R51
R52
R53
R54
R55
R56
R57
R58
R59
C17
C18
C19
C20
C21
C22
D3
D4
XTL1
S2A
S2B
S3
12V
5V